Current part is item (7) on diagram. Available at www.oshkoshequipment.com

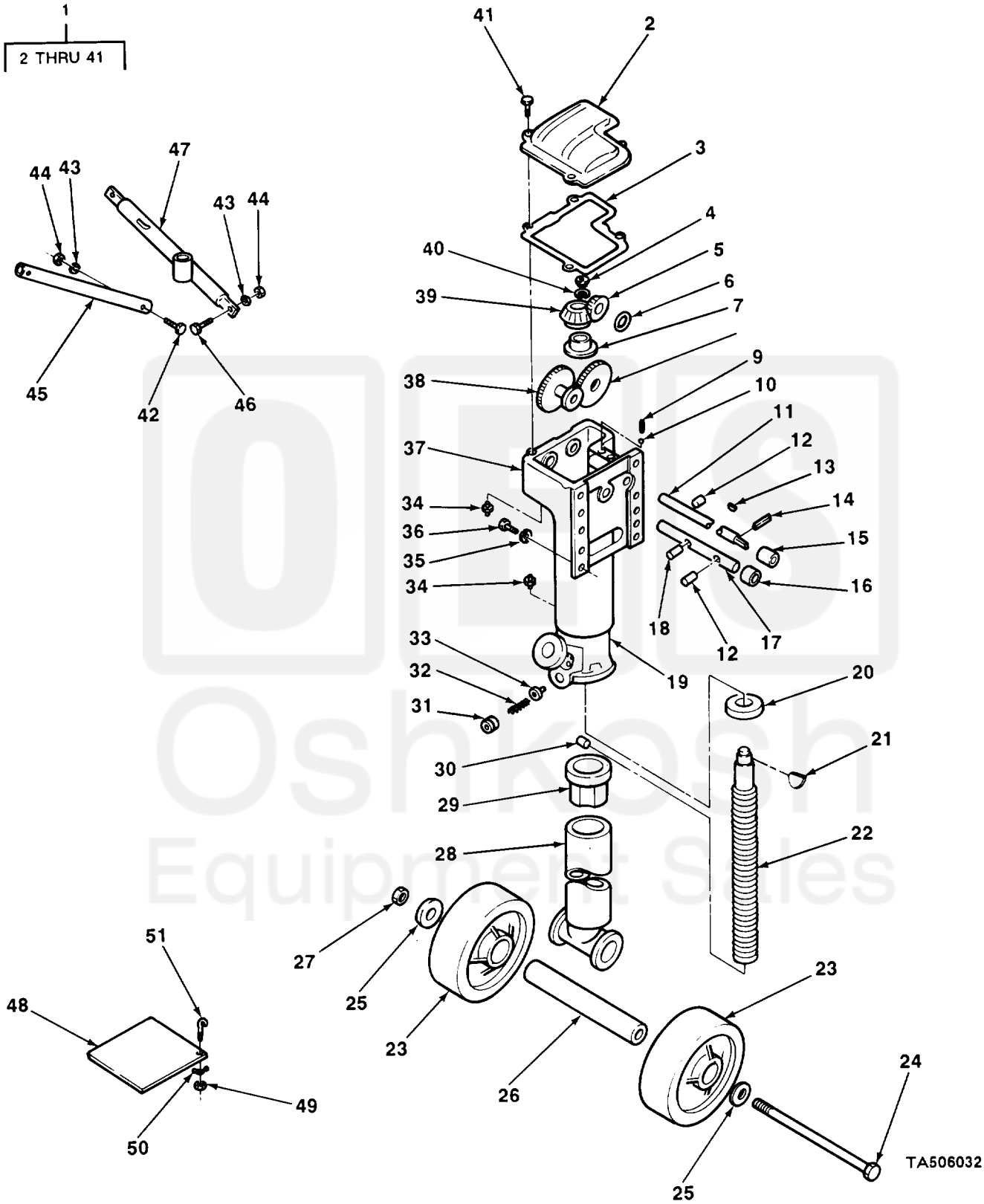

FIGURE 39. LANDING GEAR, EARLY MODEL.

Current part is item (7) on diagram. Available at www.oshkoshequipment.com

Current part is item (7) on diagram. Available at www.oshkoshequipment.com

(1) ITEM NO	(2) SMR CODE	(3) CAGEC	(4) PART NUMBER	(5) DESCRIPTION AND USABLE ON CODES (UOC)	(6) QTY
				GROUP 1507 LANDING GEAR, LEVELING JACKS	
				FIG. 39 LEVELING JACK, EARLY MODEL	
1	PAOFF	19207	10900549	SUPPORT,RETRACTABLE LANDING GEAR, LH (EARLY MODEL) UOC:934,935,936,937,938,939,940,941, 942,947,948,949,950,951	1
1	PAOFF	19207	7998651	SUPPORT,RETRACTABLE LANDING GEAR, RH (EARLY MODEL) UOC:934,935,936,937,938,939,940,941, 942,947,948,949,950,951	1
2	XDFZZ	19207	10900555	.COVER GEAR BOX,LH (EARLY MODEL) UOC:934,935,936,937,938,939,940,941, 942,947,948,949,950,951	1
2	PAFZZ	19207	7974887	.COVER,ACCESS GEAR BOX,RH (EARLY MODEL) UOC:934,935,936,937,938,939,940,941, 942,947,948,949,950,951	1
3	PAFZZ	19207	7974885	.GASKET GEAR BOX COVER (EARLY MODEL) UOC:934,936,937,938,939,940,941, 942,947,948,949,950,951	1
4	PAFZZ	80205	NAS1022A17	.NUT,SELF-LOCKING,HE LOWER LEG SPRING (EARLY MODEL) UOC:934,935,936,937,938,939,940,941, 942,947,948,949,950,951	1
5	PAFZZ	19207	8376574	.GEAR,BEVEL (EARLY MODEL) UOC:934,935,936,937,938,939,940,941, 942,947,948,949,950,951	1
6	PAFZZ	19207	8376583	.WASHER,FLAT BEVEL GEAR SHAFT (EARLY MODEL) UOC:934,935,936,937,938,939,940,941, 942,947,948,949,950,951	1
7	PAFZZ	96906	MS19081-137	.BEARING,ROLLER,TAPE UPPER,RIGHT LEG (EARLY MODEL) UOC:934,935,936,937,938,939,940,941, 942,947,948,949,950,951	1
7	PAFZZ	11083	1B4012	.CUP,TAPERED ROLLER UPPER BEARING, LEFT LEG (EARLY MODEL) UOC:934,935,936,937,938,939,940,941, 942,947,948,949,950,951	1
7	PAFZZ	11083	1B4014	.CONE AND ROLERS,TA UPPER,LEFT LEG (EARLY MODEL) UOC:934,935,936,937,938,939,940,941, 942,947,948,949,950,951	1
8	PAFZZ	19207	8376611	.GEAR CLUSTER LIDING,SPUR,LANDING GEAR LEG (EARLY MODEL) UOC:934,935,936,937,938,939,940,941, 942,947,948,949,950,951	1
9	PAFZZ	19207	8376590	.SPRING,HELICAL,CCMP GEAR SET	1

Current part is item (7) on diagram. Available at www.oshkoshequipment.com